AMERIFLO

MODEL
AF6-135

UL - cUL LISTED RATINGS BHP & KW

ENGINE MODEL:	AF6-135
EMISSIONS:	TIER 0
DATE:	09/01/2020
DRAWING NUMBER:	AF6-135.00
PERFORMANCE CURVE NUMBER:	C06135
RATED POWER:	375 BHP @ 1760 RPM
	280 KW @ 1760 RPM
REFERENCE NUMBER:	14DS001E
VERSION:	A

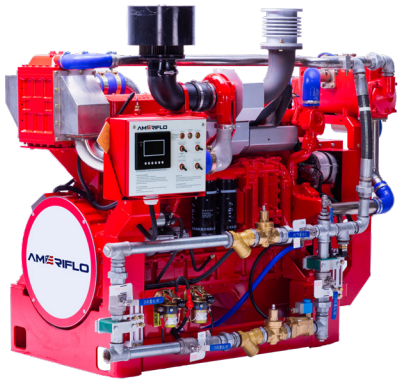

UL LISTED

GENERAL ENGINE DATA		
TYPE:		4 CYCLE; INLINE; WATER COOLED
NUMBER OF CYLINDERS:		6
ASPIRATION:		TURBOCHARGED + WATER COOLED
BORE & STROKE - IN [MM]:		5.32 x 5.91 [135 x 150]
CYLINDER LINER TYPE:		■ WET ☐ DRY
DISPLACEMENT - IN^3 [L]:		786 [12.88]
COMPRESSION RATIO:		15.75:01
FIRING ORDER:		1 - 5 - 3 - 6 - 2 - 4
COMBUSTION SYSTEM:		DIRECT INJECTION
ROTATION (AS VIEWED FROM FRONT OF ENGINE):		CCW
VALVES PER CYLINDER:		INTAKE: 1 EXHAUST: 1
VALVE LASH (COLD ENGINE):	INTAKE - IN [MM]:	0.013 [0.325]
	EXHAUST - IN [MM]:	0.015 [0.375]
IGNITION TYPE:		COMPRESSION (DIESEL)
CHARGE AIR COOLING TYPE:		RAW WATER
WEIGHT (FUEL PUMP CONFIGURATION) - LBS [KG]:		3263 [1480]
DIMENSIONS (L x W x H) - IN [MM]:		72 x 43 x 60 [1835 x 1085 x 1529]
FLYWHEEL / FLYWHEEL HOUSING DIMENSIONS:		14.00 INCHES / SAE #1
TORQUE @ RATED RPM - LB-FT [N-M]:		1120 [1519]

ENGINE PERFORMANCE DATA		
ESTIMATED FREE FIELD SOUND PRESSURE LEVEL AT 3 FEET [1 METER] WITH FULL-LOAD GOVERNED SPEED (INCLUDES NOISE FROM EXHAUST, COOLING SYSTEM AND DRIVEN COMPONENTS)	dBa	≤ 108
ALL DATA IS BASED ON ENGINE OPERATIONG WITH FUEL SYSTEM, LUBRICATING OIL PUMP, AIR CLEANER AND ALTERNATOR. DOES NOT INCLUDE AIR COMPRESSOR, FAN & OPTIONAL EQUIPMENT. DATA IS BASED ON SAE STANDARD J1349 CONDITIONS AT 300 FEET [91.4 METERS] ALTITUDE, 29.61 INCHES [752 MILLIMETERS] HG DRY BAROMETER AND 77°F [25°C] INTAKE AIR TEMPERATURE USING #0 DIESEL FUEL FOLLOWING THE GB 252-2011 STANDARD.		
ALTITUDE ABOVE WHICH OUTPUT SHOULD BE DERATED:	FEET [METER]	300 [91]
DERATE PER 1,000 FEET [305 METERS] ABOVE ALTITUDE LIMIT:	3%	
TEMPERATURE ABOVE WHICH OUTPUT SHOULD BE DERATED:	°F [°C]	77 [25]
DERATE PER 10°F [5.6°C] ABOVE TEMPERATURE LIMIT:	1%	

❶ ALL DATA CERTIFIED WITHIN ±5%.

©2021 AMERIFLO

AMERIFLO

MODEL
AF6-135

EXHAUST SYSTEM		
EXHAUST GAS TEMPERATURE @ MAXIMUM RATING (POWER) - °F [°C]:		≤ 1112 [600]
EXHAUST GAS FLOW @ MAXIMUM OUTPUT - CFM [M³/HR]:		2129 [3618]
MAXIMUM ALLOWABLE BACK PRESSURE - PSI [KPA]:		1.45 [10]
MINIMUM EXHAUST PIPE DIAMETER - IN [MM]:		4 [100]
AIR INTAKE SYSTEM		
AIR CLEANER TYPE:		DRY TYPE, DISPOSABLE
AIR FLOW - CFM [M³/HR]:		904 [1536]
AIR INLET RESTRICTION (DIRTY) - PSI [KPA]:		≤ 0.87 [6]
AIR INLET RESTRICTION (CLEAN) - PSI [KPA]:		≤ 0.44 [3]
LUBRICATION SYSTEM		
OIL CAPACITY (ENGINE ONLY) - QTS [L]:		33.8 [32]
MAXIMUM SUMP OIL TEMPERATURE - °F [°C]:		239 [115]
NORMAL OPERATING OIL PRESSURE RANGE - PSI [BAR]:		58.0 ~ 87.0 [4.0 ~ 6.0]
OIL PRESSURE @ IDLE - PSI [BAR]:		> 2.2 [0.15]
COOLING SYSTEM		
COOLANT CAPACITY (ENGINE & HEAT EXCHANGER) - QTS [L]:		50.7 [48]
THERMOSTAT RANGE:	START OPEN - °F [°C]:	171 [77]
	FULL OPEN - °F [°C]:	194 [90]
COOLANT PRESSURE MAXIMUM - PSI [BAR]:		13 [0.9]
MAXIMUM ENGINE COOLANT TEMPERATURE - °F [°C]:		≤ 208 [98]
ENGINE COOLANT FLOW @ FULL SPEED - GPM [M³/HR]:		163 [27]
RAW WATER COOLING CAPACITY - GPM [M³/HR]:		88 [20]
RAW WATER PRESSURE - PSI [BAR]:		36.3 [2.5]
MAXIMUM RAW WATER TEMPERATURE - °F [°C]:		100 [37.8]
RAW WATER INTAKE PIPE SIZE:	RAW WATER INLET - IN:	1.50 NPT
	RAW WATER OUTLET - IN:	2.00 NPT
HEATER SYSTEM		
WATTAGE - W:		4500
VOLTAGE (AC) - V:		220
DC ELECTRICAL SYSTEM		
NORMAL SYSTEM VOLTAGE - V:		24
STARTER MOTOR - HP [KW]:		11.4 [8.5]
RECOMMENDED MINIMUM BATTERY SIZE - AH:		180
COLD CRANKING AMPS @ 0°F (-18°C):		900
RESERVE CAPACITY - AMPS:		360
CHARGING ALTERNATOR OUTPUT - AMPS:		36
STARTER CRANKING AMPS, ROLLING @ 0°F (-18°C):		430
MINIMUM CRANKING SPEED REQUIRED FOR UNAIDED COLD START - RPM:		210

❶ ALL DATA CERTIFIED WITHIN ±5%.

©2021 AMERIFLO

AMERIFLO

MODEL
AF6-135

FUEL SYSTEM	
INJECTION PUMP:	INLINE, PLUNGER TYPE
INJECTION PUMP ADVANCE ANGLE - °:	14.5
MINIMUM SUPPLY LINE SIZE - IN [MM]:	0.50 [12]
MINIMUM RETURN LINE SIZE - IN [MM]:	0.50 [12]
FUEL MANAGEMENT CONTROL:	MECHANICAL
FUEL CONSUMPTION @ 1760 RPM - LB/BHP-HR [G/KW-HR]:	0.345 [210]
IDLE SPEED - RPM:	750
MAXIMUM GOVERNED SPEED - RPM:	1980
MAXIMUM ALLOWABLE FUEL HEIGHT ABOVE FUEL PUMP - FT [M]:	9.8 [3]
GOVERNED SPEED RATE - %:	≤ 10

① ALL DATA CERTIFIED WITHIN ±5%.

AMERIFLO

©2021 AMERIFLO

AMERIFLO

MODEL
AF6-135

ENGINE MATERIALS & CONSTRUCTION

ENGINE

CAMSHAFT:	
TYPE	OVERHEAD
MATERIAL	CARBON STEEL
LOCATION	IN BLOCK
DRIVE	SPUR GEAR
CONNECTING RODS:	
TYPE	I-BEAM, FRACTURE
MATERIAL	FORGED STEEL
CRANKSHAFT:	
TYPE	GROUND
MATERIAL	DUCTILE IRON
MAIN BEARINGS:	
TYPE	PRECISION, HALF SHELL
MATERIAL	TIM ALUMINUM ALLOY
CYLINDER BLOCK:	
TYPE	GANTRY
MATERIAL	CAST IRON
CYLINDER HEAD:	
TYPE	ONE PIECE
MATERIAL	CAST IRON
CYLINDER LINERS:	
TYPE	WET LINED
MATERIAL	CAST IRON ALLOY
PISTONS:	
TYPE	TRUNK
MATERIAL	ALUMINUM ALLOY
PISTON PINS:	
TYPE	FULL FLOATING
MATERIAL	ALLOY STEEL
PISTON RINGS:	
FIRST	DUCTILE CAST IRON
SECOND	ALLOY CAST IRON
THIRD	ALLOY CAST IRON
VALVES:	
TYPE	POPPET
ARRANGEMENT	OVERHEAD
VALVE # PER CYLINDER	1 INTAKE, 1 EXHAUST
OPERATING MECHANISM	MECHANICAL ROCKER ARM
LIFTER TYPE	LARGE HEAD

AIR INTAKE

AIR CLEANER:	
TYPE	DRIP PROOF
MATERIAL	PLEATED PAPER

COOLING SYSTEM

COOLANT HEAT EXCHANGER:	
TYPE	TUBE & SHELL
MATERIAL	
ELECTRODE	ZINC
HEADERS	ALUMINUM
SHELL	ALUMINUM
TUBES	COPPER
COOLANT PUMP:	
TYPE	CENTRIFUGAL
DRIVE	V-BELT
THERMOSTAT:	
TYPE	NON-BLOCKING
QUANTITY	1
COOLING LOOP (GALVANIZED):	
TEES, ELBOWS, PIPE	GALVANIZED STEEL
BALL VALVES	BRASS
SOLENOID VALVE	BRASS
PRESSURE REGULATOR	BRASS
STRAINER	BRASS
COOLING LOOP (316 STAINLESS STEEL):	
TEES, ELBOWS, PIPE	316 STAINLESS STEEL
BALL VALVES	316 STAINLESS STEEL
SOLENOID VALVE	316 STAINLESS STEEL
PRESSURE REGULATOR	316 STAINLESS STEEL
STRAINER	316 STAINLESS STEEL

FUEL SYSTEM

FUEL INJECTION PUMP:	
TYPE	FULL MECHANICAL, CENTRIFUGAL
DRIVE	GEAR DRIVEN

LUBRICATION SYSTEM

TYPE	GEROTOR
DRIVE	GEAR

©2021 AMERIFLO

AMERIFLO

MODEL
AF6-135

SPARE PARTS LIST			
PART DESCRIPTION	**QUANTITY**	**PART NUMBER**	**REMARKS**
LUBRICATION SYSTEM			
OIL FILTER	2 PIECES	AF-D17-002-02+B	
OIL PRESSURE SENSOR	1 PIECE	AF-21103-OPS	
FUEL SYSTEM			
FUEL FILTER	1 PIECE	AF-S00010128+1	
INJECTION PUMP	1 PIECE	AF-S00000770+01	
FUEL SUPPLY & RETURN HOSE	1 PIECE	AF6-135-6.1	
	1 PIECE	AF6-135-6.2	
COOLING SYSTEM			
HEAT EXCHANGER	1 PIECE	AF-C300ZJ-HE	
COOLING LOOP	1 SET	AF-CL40SV	
COOLANT HOSE (90° ELBOW)	1 PIECE	AF-E90-60/120P4	
COOLANT HOSE (90° REDUCER ELBOW)	1 PIECE	AF-RE-60-65/130P4	
COOLING HOSE	1 PIECE	AF-8-3-800-CH	
	1 PIECE	AF-16-5-2000-CH	
WATER PUMP	1 PIECE		
RUNNING WATER TEMPERATURE SENSOR	1 PIECE	AF-E00105-WTR	
STANDBY WATER TEMPERATURE SENSOR	1 PIECE	AF-00108-WTS	
THERMOSTAT	1 PIECE	AF-1500079215	
PREHEATER	1 PIECE	AF-FH220450065 OR AF-FH110200065 OR AF-SH110200065	
FLOW SENSOR	1 PIECE		
CONTROL SYSTEM			
STARTER	1 PIECE	AF-S00011506+02	
ALTERNATOR	1 PIECE	AF-S00011521+01	
BATTERY	2 PIECES	AF-N200	
STARTER CONTACTOR	2 PIECES		
OVERSPEED SHUTDOWN	1 PIECE		
SPEED SENSOR	1 PIECE		
INSTRUMENT PANEL	1 SET	AF-ENL-AB-ETS/R-B	
TRANSMISSION SYSTEM			
BELT	2 PIECES	AF-1500079197	
STOP SOLENOID	1 PIECE	AF-5295568-SN	
INTAKE & EXHAUST SYSTEM			
AIR FILTER	1 PIECE	AF-S00034176+02	
TURBOCHARGER	1 PIECE		

©2021 AMERIFLO

AMERIFLO

MODEL
AF6-135

POWER CURVE			
CURVE NUMBER:	C06135	DATE:	09/01/2020
DISPLACEMENT - IN³ [L]:	786 [12.88]	ASPIRATION:	TURBOCHARGED + WATER COOLED
POWER STANDARD:	UL	BORE & STROKE - IN [MM]:	5.32 x 5.91 [135 x 150]
NUMBER OF CYLINDERS:	6	FUEL SYSTEM:	INLINE, MECHANICAL

❶ ALL DATA CERTIFIED WITHIN ±5%.

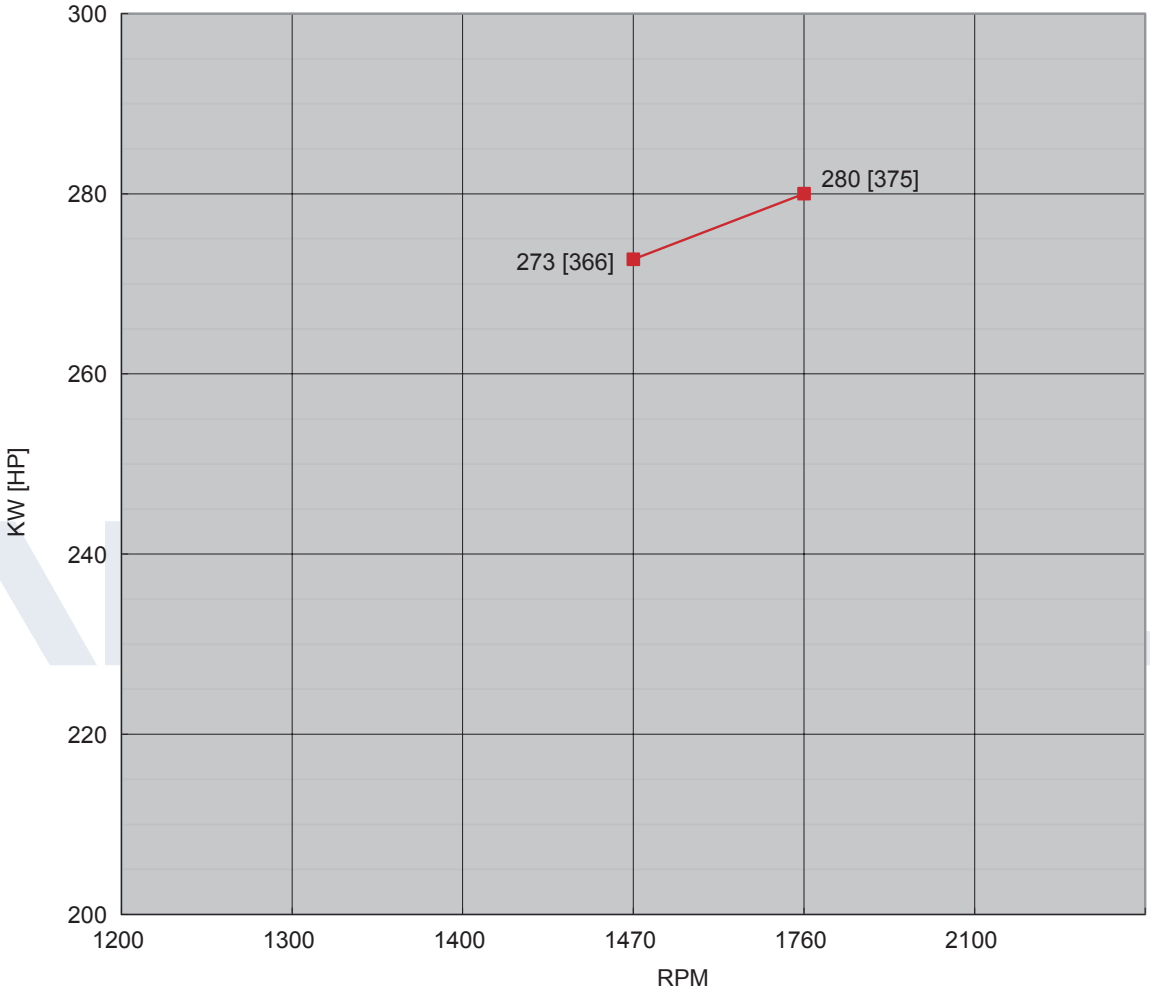

TORQUE		
SPEED RPM	LB-FT	N-M
1150		
1470	1307	1772
1760	1120	1519
2100		

OUTPUT POWER		
SPEED RPM	HP	KW
1150		
1470	366	273
1760	375	280
2100		

FUEL CONSUMPTION		
SPEED RPM	LB/BHP-HR	G/KW-HR
1150		
1470	0.337	205
1760	0.345	210
2100		

❶ ALL DATA IS BASED ON ENGINE OPERATIONG WITH FUEL SYSTEM, LUBRICATING OIL PUMP, AIR CLEANER AND ALTERNATOR. DOES NOT INCLUDE AIR COMPRESSOR, FAN & OPTIONAL EQUIPMENT. DATA IS BASED ON SAE STANDARD J1394 CONDITIONS AT 300 FEET [91.4 METERS] ALTITUDE, 29.61 INCHES [752 MILLIMETERS] HG DRY BAROMETER AND 77°F [25°C] INTAKE AIR TEMPERATURE USING #0 DIESEL FUEL FOLLOWING THE GB 252-2011 STANDARD.

©2021 AMERIFLO

AMERIFLO
125 Morrison Road, Rossville, TN 38066
www.ameriflo-usa.com

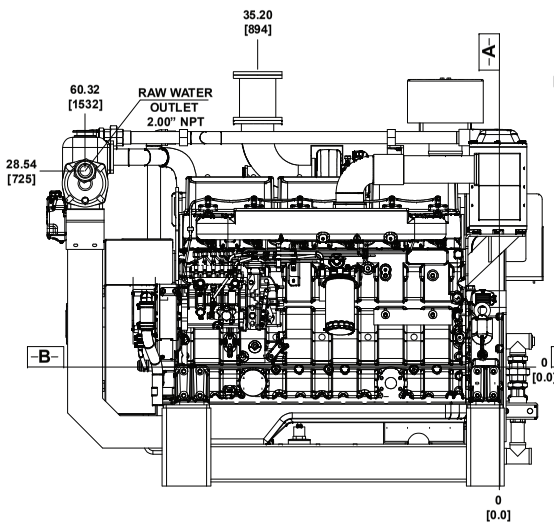

LEFT SIDE VIEW

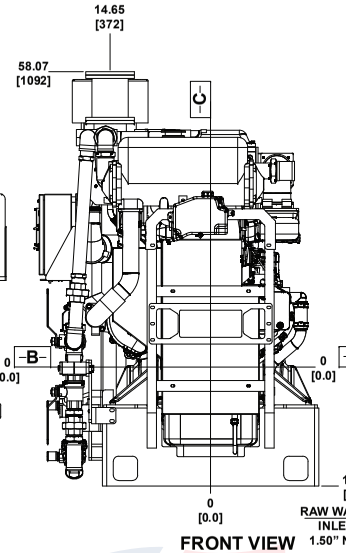

FRONT VIEW

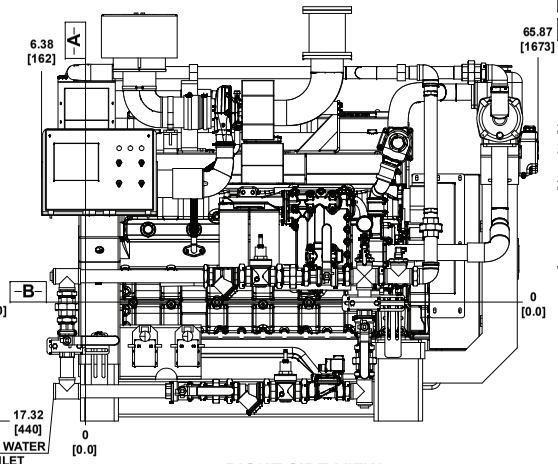

RIGHT SIDE VIEW

DATUMS:

-A- — DIMENSIONAL FACE OF FLYWHEEL
-B- — ENGINE HORIZONTAL CENTER (CRANKSHAFT)
-C- — ENGINE VERTICAL CENTER (CRANKSHAFT)

NOTES:

1. FUEL SUPPLY PIPING MINIMUM INSIDE DIAMETER FROM TANK TO ENGINE MUST BE ≥ 0.500 [12].
2. FUEL RETURN PIPING MINIMUM INSIDE DIAMETER FROM TANK TO ENGINE MUST BE ≥ 0.500 [12].

DRAWING SUBJECT TO CHANGE WITHOUT NOTICE.

A - EXHAUST FLANGE (4")

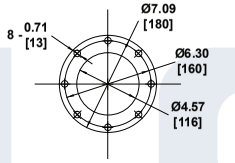

SCALE 2:1

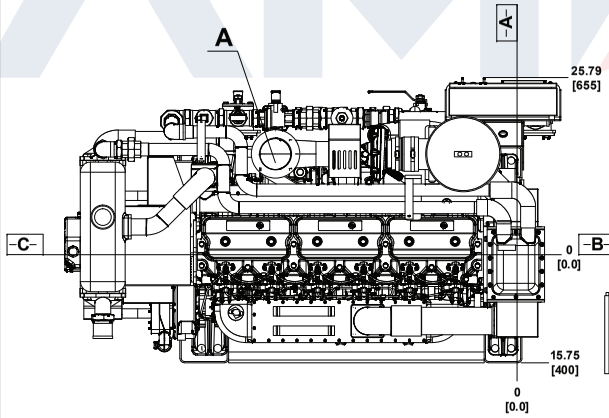

TOP VIEW

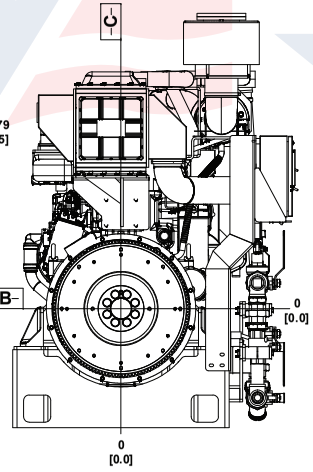

REAR VIEW

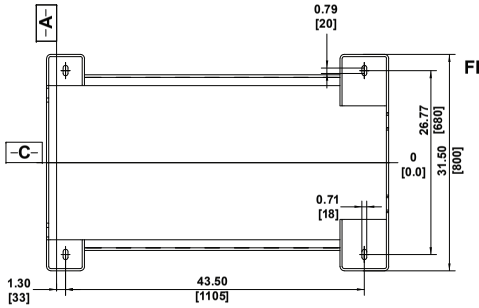

MOUNTING DIMENSIONS

FLYWHEEL HOUSING SAE #1 FLYWHEEL 14.00 INCH

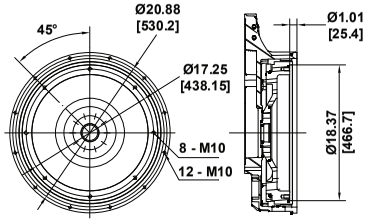

NOTES:

1. ALL PLUMBING MUST BE SUPPORTED AND/OR ISOLATED SO THAT NO WEIGHT OR STRESS IS APPLIED TO ANY ENGINE COMPONENT.
2. REFER TO SPECIFIC MODELS' INSTALLATION, OPERATION & MAINTENANCE MANUAL FOR INSTALLATION GUIDELINES.

REV	DESCRIPTION	DWN	APVD	DATE
A	CREATION	MJF		09/01/2020

AMERIFLO

REV	
UNITS	IN[MM]
DRW BY: MJF	DATE: 09/01/2020
CHK BY:	DATE:
APPROVED:	DATE:
NAME:	INSTALLATION DRAWING DIESEL FIRE PUMP DRIVER MODEL AF6-135
PART NO.:	AF6-135-00
MATERIAL:	
PROJECTION:	
PROJECT:	
SCALE: NONE	PAGE 1 OF 1

©2021 AMERIFLO

AMERIFLO
125 Morrison Road, Rossville, TN 38066
www.ameriflo-usa.com

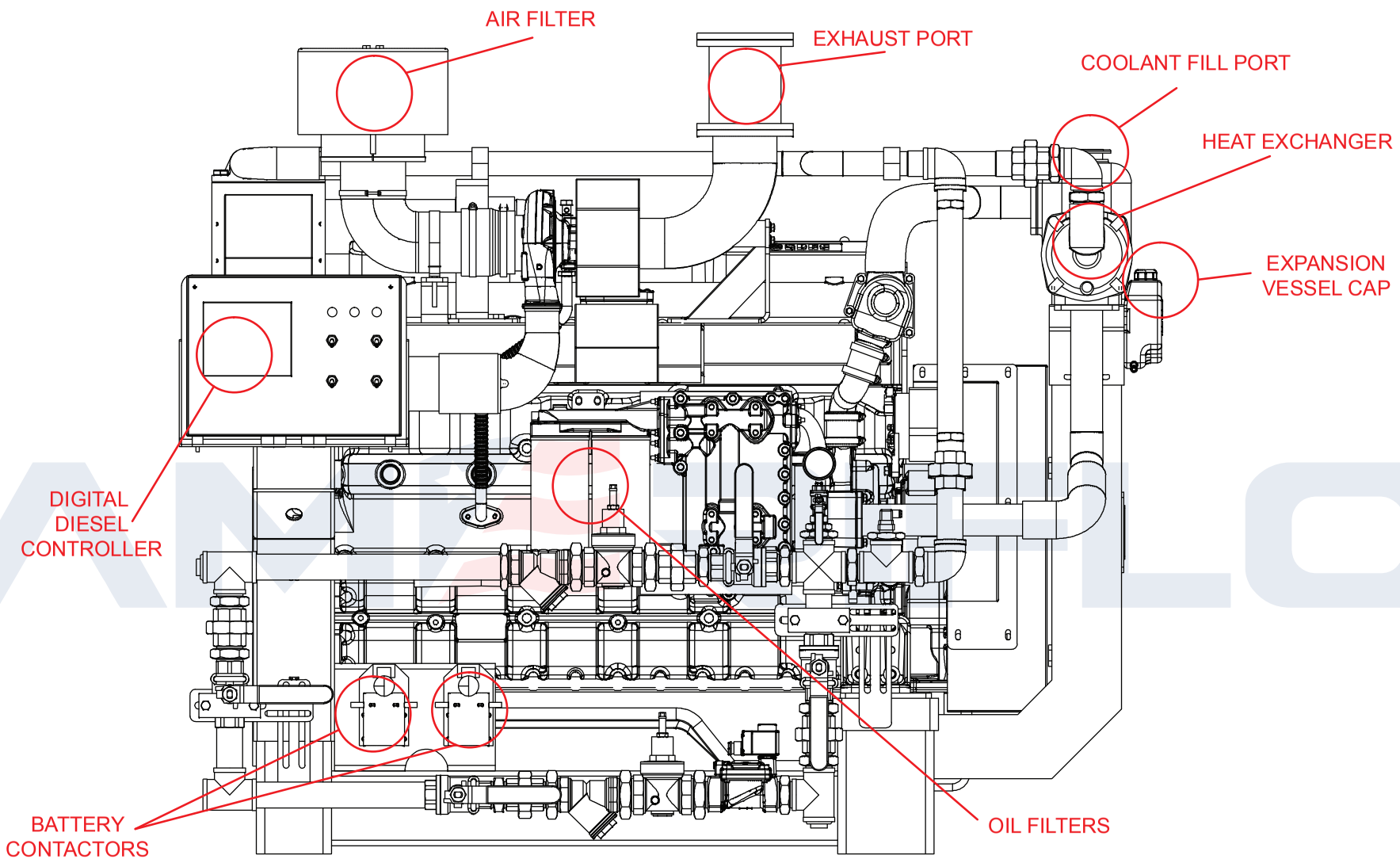

NOTES:
1. ALL PLUMBING MUST BE SUPPORTED AND/OR ISOLATED SO THAT NO WEIGHT OR STRESS IS APPLIED TO ANY ENGINE COMPONENT.
2. REFER TO SPECIFIC MODELS' INSTALLATION, OPERATION & MAINTENANCE MANUAL FOR INSTALLATION GUIDELINES.

REV	DESCRIPTION	DWN	APVD	DATE
A	CREATION	MJF		09/01/2020

AMERIFLO

REV			
UNITS IN[MM]			
DRW BY: MJF	DATE: 09/01/2020	NAME: INSTALLATION DRAWING DIESEL FIRE PUMP DRIVER MODEL AF6-135	PROJECTION:
CHK BY:	DATE:		PROJECT:
APPROVED:	DATE:	PART NO.: AF6-135-RIGHT	SCALE: NONE / PAGE 1 / OF 1
		MATERIAL:	

ENGINE MODEL AF6-135
©2021 AMERIFLO

AMERIFLO
125 Morrison Road, Rossville, TN 38066
www.ameriflo-usa.com

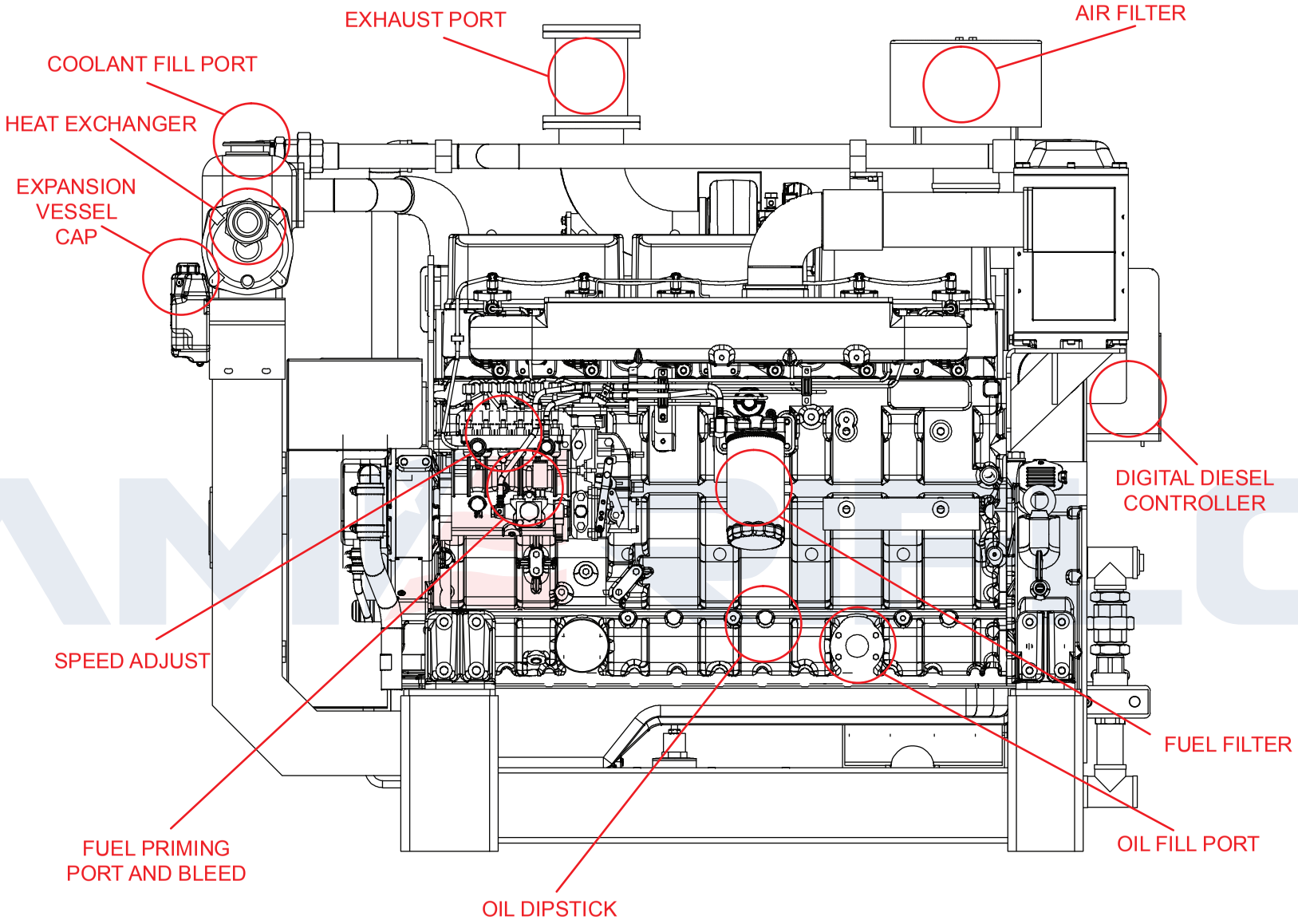

NOTES:
1. ALL PLUMBING MUST BE SUPPORTED AND/OR ISOLATED SO THAT NO WEIGHT OR STRESS IS APPLIED TO ANY ENGINE COMPONENT.
2. REFER TO SPECIFIC MODELS' INSTALLATION, OPERATION & MAINTENANCE MANUAL FOR INSTALLATION GUIDELINES.

REV	DESCRIPTION	DWN	APVD	DATE
A	CREATION	MJF		09/01/2020

AMERIFLO

REV

UNITS IN[MM]

DRW BY: MJF DATE: 09/01/2020
CHK BY: DATE:
APPROVED: DATE:

NAME: INSTALLATION DRAWING DIESEL FIRE PUMP DRIVER MODEL AF6-135

PART NO.: AF6-135-LEFT

MATERIAL:

PROJECTION:

PROJECT:

SCALE: NONE

PAGE 1 OF 1

ENGINE MODEL AF6-135

©2021 AMERIFLO

AMERIFLO
125 Morrison Road, Rossville, TN 38066
www.ameriflo-usa.com

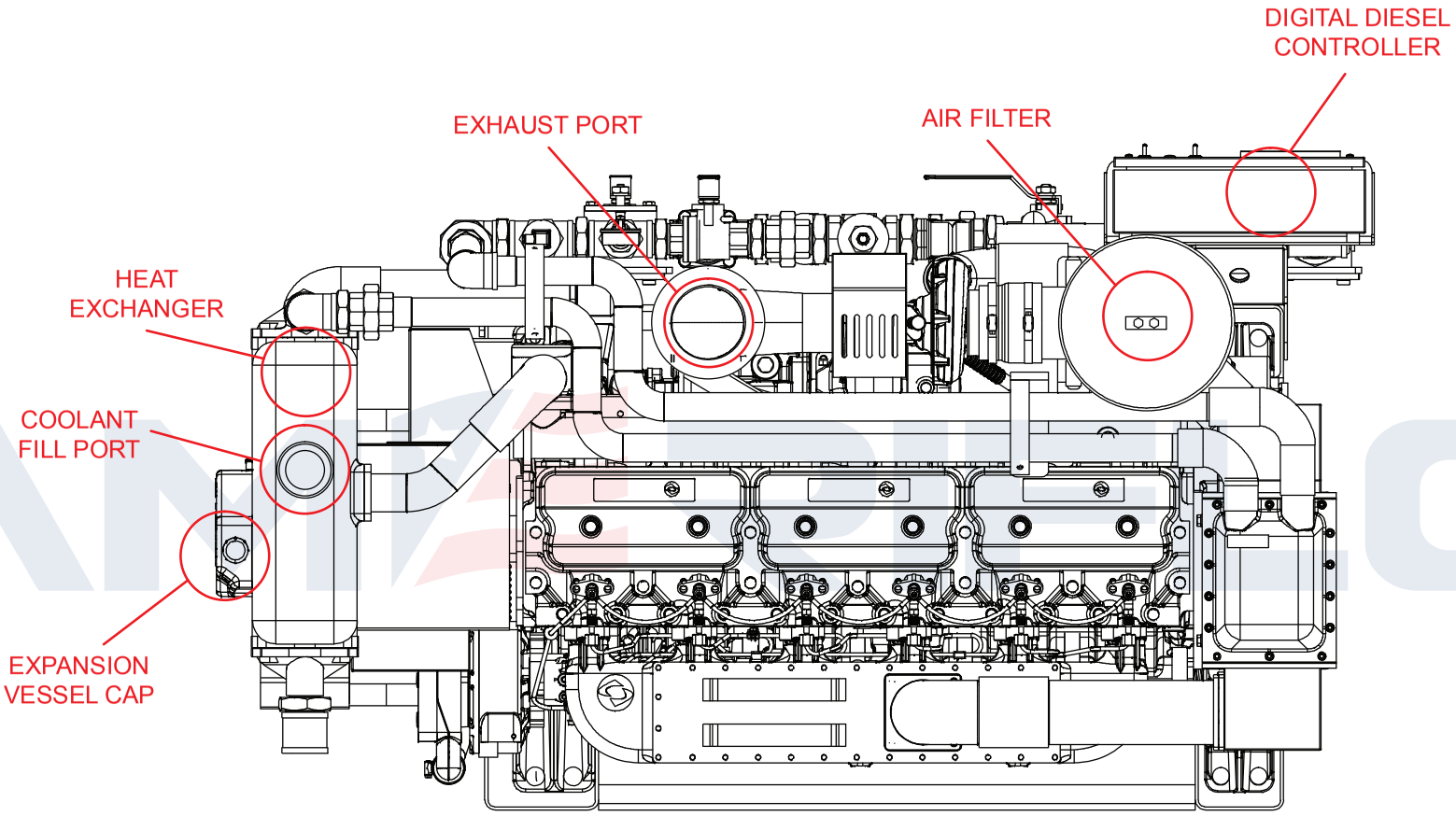

NOTES:
1. ALL PLUMBING MUST BE SUPPORTED AND/OR ISOLATED SO THAT NO WEIGHT OR STRESS IS APPLIED TO ANY ENGINE COMPONENT.
2. REFER TO SPECIFIC MODELS' INSTALLATION, OPERATION & MAINTENANCE MANUAL FOR INSTALLATION GUIDELINES.

REV	DESCRIPTION	DWN	APVD	DATE
A	CREATION	MJF		09/01/2020
REV	DESCRIPTION	DWN	APVD	DATE

AMERIFLO

REV

UNITS IN[MM]

DRW BY: MJF DATE: 09/01/2020

CHK BY: DATE:

APPROVED: DATE:

NAME: INSTALLATION DRAWING DIESEL FIRE PUMP DRIVER MODEL AF6-135

PART NO.: AF6-135-TOP

MATERIAL:

PROJECTION:

PROJECT:

SCALE: NONE

PAGE 1 OF 1

ENGINE MODEL AF6-135

©2021 AMERIFLO

AMERIFLO
125 Morrison Road, Rossville, TN 38066
www.ameriflo-usa.com

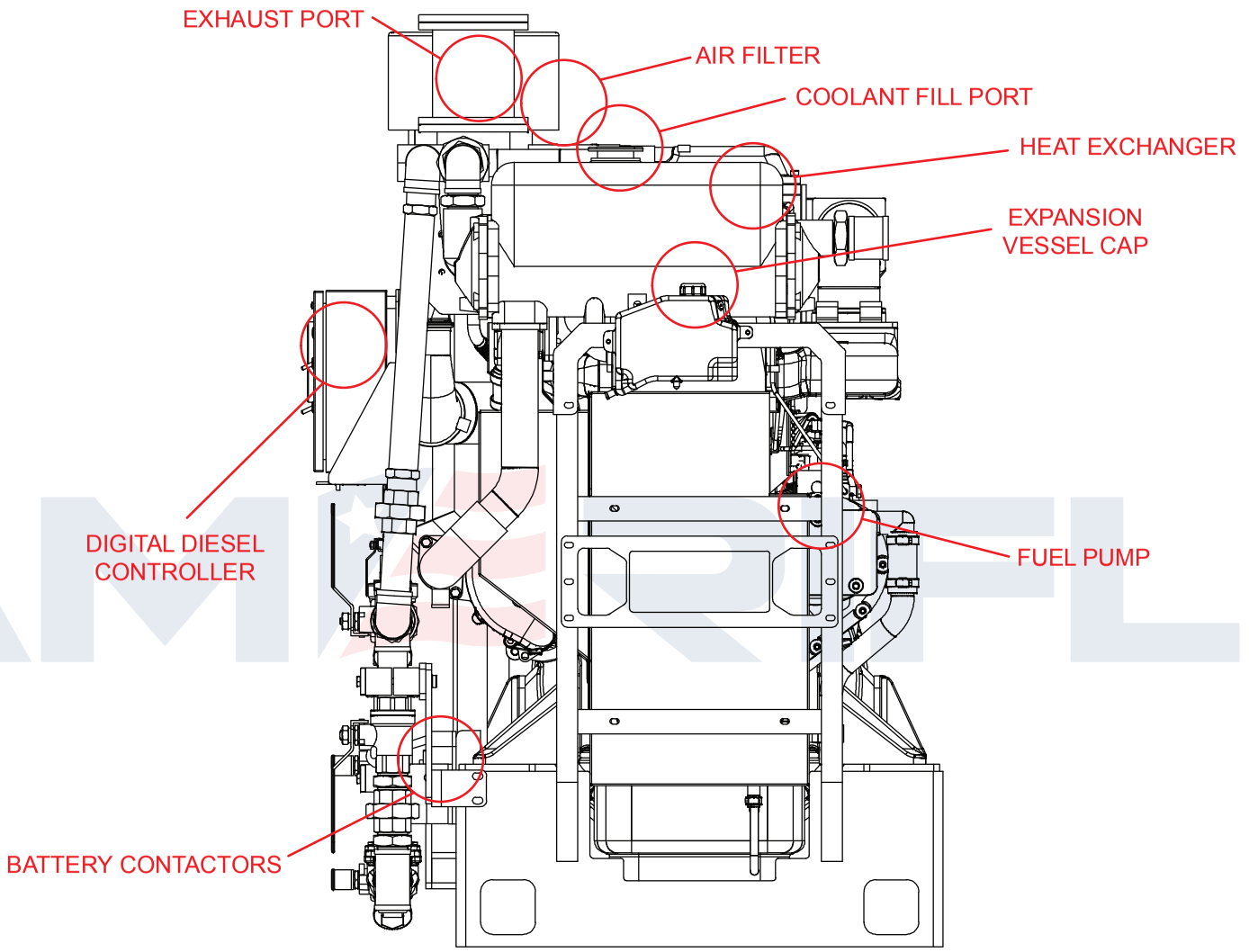

NOTES:
1. ALL PLUMBING MUST BE SUPPORTED AND/OR ISOLATED SO THAT NO WEIGHT OR STRESS IS APPLIED TO ANY ENGINE COMPONENT.
2. REFER TO SPECIFIC MODELS' INSTALLATION, OPERATION & MAINTENANCE MANUAL FOR INSTALLATION GUIDELINES.

REV	DESCRIPTION	DWN	APVD	DATE
A	CREATION	MJF		09/01/2020

AMERIFLO

REV

UNITS IN[MM]

DRW BY: MJF DATE: 09/01/2020
CHK BY: DATE:
APPROVED: DATE:

NAME: INSTALLATION DRAWING DIESEL FIRE PUMP DRIVER MODEL AF6-135

PART NO.: AF6-135-FRONT

MATERIAL:

PROJECTION:

PROJECT:

SCALE: NONE

PAGE 1 OF 1

ENGINE MODEL AF6-135
©2021 AMERIFLO

AMERIFLO
125 Morrison Road, Rossville, TN 38066
www.ameriflo-usa.com

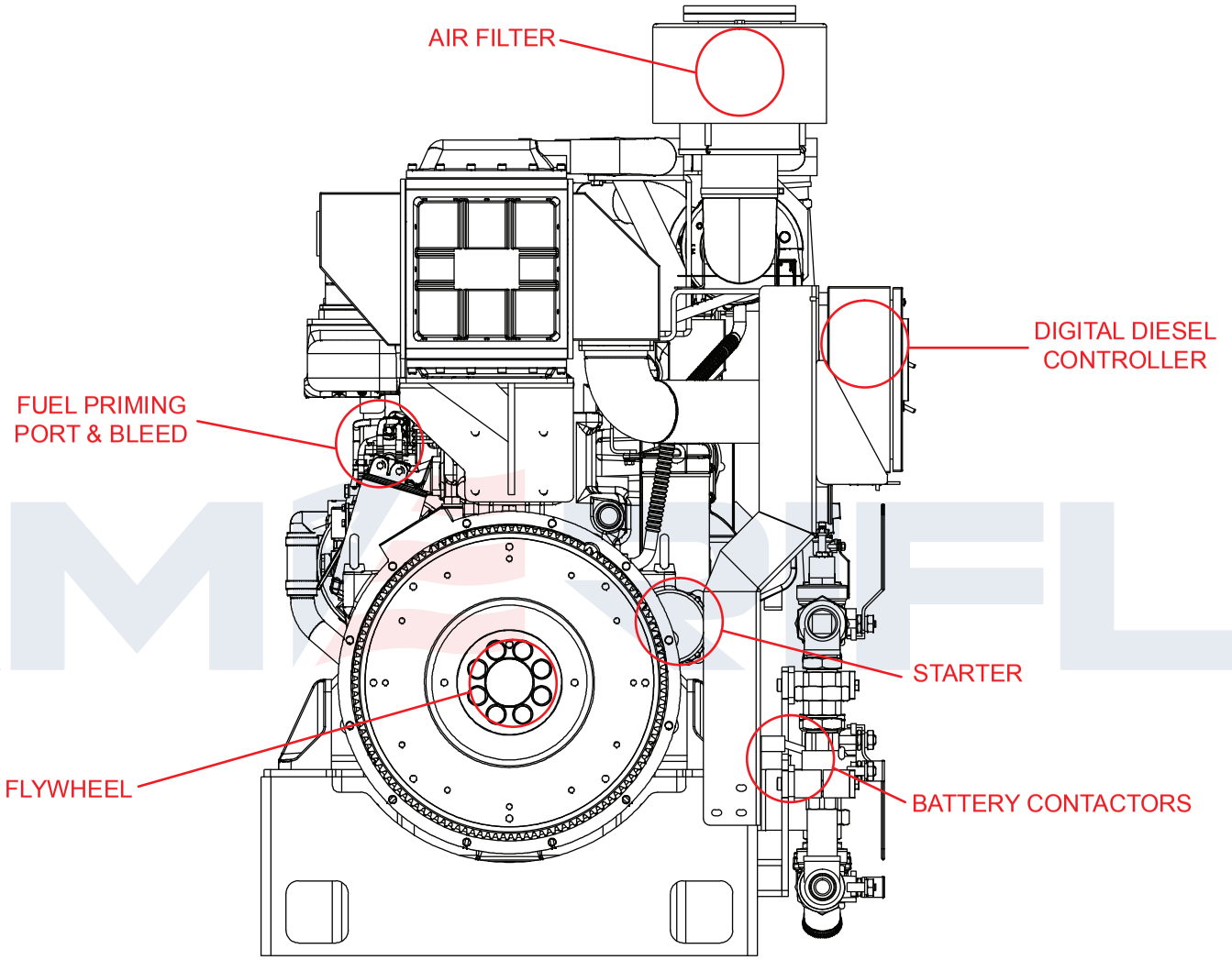

NOTES:
1. ALL PLUMBING MUST BE SUPPORTED AND/OR ISOLATED SO THAT NO WEIGHT OR STRESS IS APPLIED TO ANY ENGINE COMPONENT.
2. REFER TO SPECIFIC MODELS' INSTALLATION, OPERATION & MAINTENANCE MANUAL FOR INSTALLATION GUIDELINES.

REV	DESCRIPTION	DWN	APVD	DATE
A	CREATION	MJF		09/01/2020

AMERIFLO

REV

UNITS IN[MM]

DRW BY: MJF DATE: 09/01/2020

CHK BY: DATE:

APPROVED: DATE:

NAME: INSTALLATION DRAWING DIESEL FIRE PUMP DRIVER MODEL AF6-135

PART NO.: AF6-135-REAR

MATERIAL:

PROJECTION:

PROJECT:

SCALE: NONE

PAGE 1 OF 1

ENGINE MODEL AF6-135

©2021 AMERIFLO