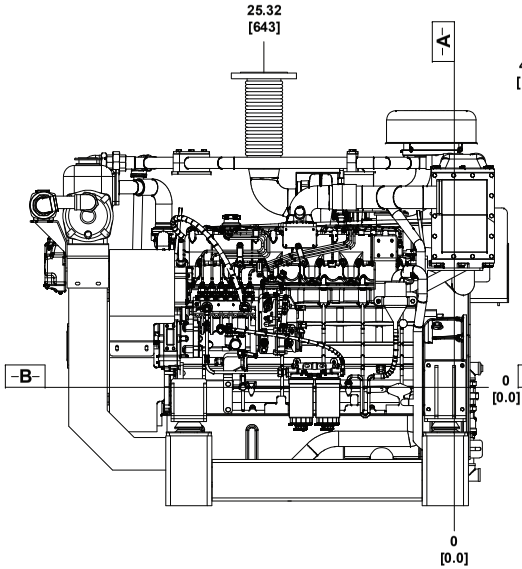

LEFT SIDE VIEW

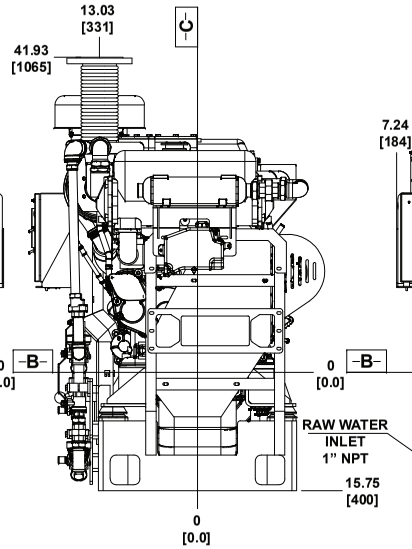

FRONT VIEW

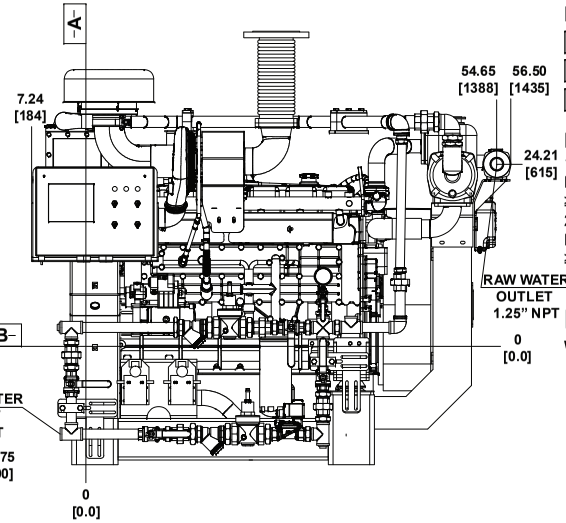

RIGHT SIDE VIEW

DATUMS:

-A- — DIMENSIONAL FACE OF FLYWHEEL

-B- — ENGINE HORIZONTAL CENTER (CRANKSHAFT)

-C- — ENGINE VERTICAL CENTER (CRANKSHAFT)

NOTES:

1. FUEL SUPPLY PIPING MINIMUM INSIDE DIAMETER FROM TANK TO ENGINE MUST BE ≥ 0.398 [10].
2. FUEL RETURN PIPING MINIMUM INSIDE DIAMETER FROM TANK TO ENGINE MUST BE ≥ 0.398 [10].

DRAWING SUBJECT TO CHANGE WITHOUT NOTICE.

A - EXHAUST FLANGE (4")

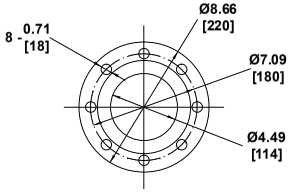

SCALE 2:1

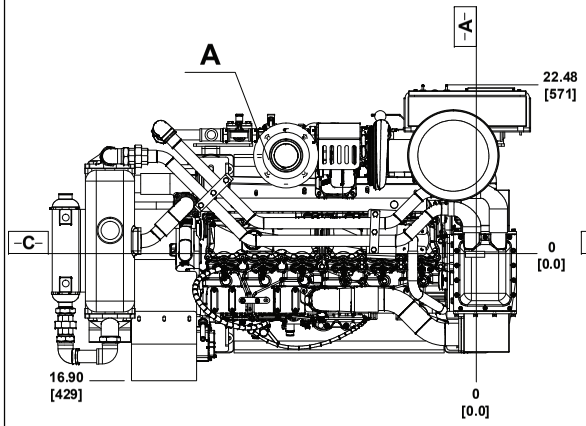

TOP VIEW

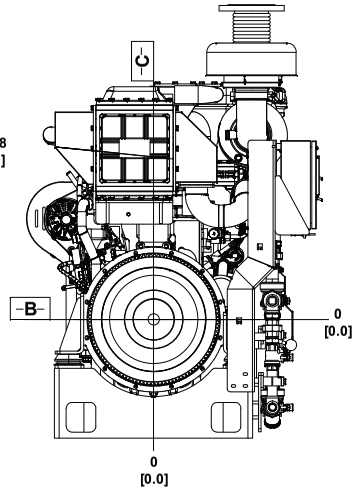

REAR VIEW

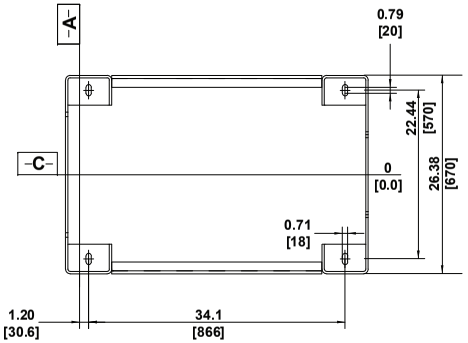

MOUNTING DIMENSIONS

FLYWHEEL HOUSING SAE #2

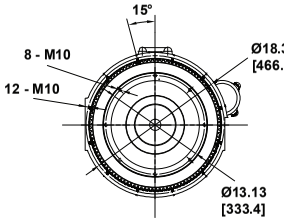

FLYWHEEL 11.50

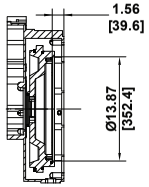

NOTES:

1. ALL PLUMBING MUST BE SUPPORTED AND/OR ISOLATED SO THAT NO WEIGHT OR STRESS IS APPLIED TO ANY ENGINE COMPONENT.
2. REFER TO SPECIFIC MODELS' INSTALLATION, OPERATION & MAINTENANCE MANUAL FOR INSTALLATION GUIDELINES.

REV	DESCRIPTION	DWN	APVD	DATE
A	CREATION	MJF		09/01/2020

AMERIFLO

DRW BY: MJF	DATE: 09/01/2020	NAME: INSTALLATION DRAWING DIESEL FIRE PUMP DRIVER MODEL AF6-108E	PROJECTION:
CHK BY:	DATE:	PART NO.: AF6-108E-00	PROJECT:
APPROVED:	DATE:	MATERIAL:	SCALE: NONE / PAGE 1 / OF 1

REV

UNITS IN[MM]